DATA & SPECIFICATION SHEETS

DEEP CYCLE *Flooded Lead Acid* 6-VOLT

US 1800, 2000 & 2200 XC2 5
US 125 XC2 6
US 145 XC2 7
US 250 XC2 - SERIES 8
US 305 XC2 - SERIES 9
US L16 XC2 - SERIES 10
US 100DIN XC2. 11

DEEP CYCLE *Flooded Lead Acid* 8-VOLT

US 8VGC XC2 - SERIES 13
US 8VHATB XC2 14

DEEP CYCLE *Flooded Lead Acid* 12-VOLT

US 24DC XC2 16
US 27DC XC2 17
US 31DC XC2 18
US 12VE XC2 19
US 12VRX XC2(Cover options US 12V and US 12VZX) 20
US 185 XC2 - SERIES. 21

RENEWABLE - DEEP CYCLE *Flooded Lead Acid* 6-VOLT

US REGC2H XC2 23
US REL16 XC2 24

RENEWABLE - DEEP CYCLE *Flooded Lead Acid* 2-VOLT

US RE L16-2V XC2 25

SINGLE POINT WATERING SYSTEMS

BATTERY WATERING TECHNOLOGIES 26
FLOW-RITE CONTROLS 27

CHARGING & MAINTENANCE

CHARGING INSTRUCTIONS 28
CARE & MAINTENANCE 29-30
RECORD KEEPING & NOTES 31

6 -Volt Deep Cycle Batteries

US 1800 XC2, US 2000 XC2, US 2200 XC2

DATA SHEET Deep Cycle 6 -Volt

Application: Wherever Deep Cycle 6-volt batteries are needed.

Dimensions:
10-1/4 (260)L x 7-1/8 (181)W x 11-1/4 (286)H

Type: Flooded Lead Acid (FLA) non-sealed.

Case material: Polypropylene / Heat Sealed

MADE IN USA

XG XTREME CAPACITY 2

US 1800 XC2, US 2000 XC2, US 2200 XC2 - SPECIFICATIONS

BCI Group Size	Model	1-hr Rate	2-hr Rate	5-hr Rate	6-hr Rate	10-hr Rate	20-hr Rate	48-hr Rate	72-hr Rate	100-hr Rate	Voltage	Standard Terminal Type	AMP HOURS (20 HR. RATE)	MINUTES @ 75 AMPS	MINUTES @ 56 AMPS	MINUTES @ 25 AMPS	Length	Width	Height	Wet Weight Lbs (kg)
GC2	US 1800 XC2	122	136	157	161	179	208	220	226	231	6	UTL	208	107	151	392	10-1/4 (260)	7-1/8 (181)	11-1/4 (286)	55 (25)
GC2	US 2000 XC2	126	144	172	178	194	220	229	235	240	6	UTL	220	115	164	445				57 (26)
GC2	US 2200 XC2	133	152	181	187	206	232	246	252	258	6	UTL	232	122	175	474				62 (28)

TERMINAL OPTIONS:

VENT CAP OPTIONS:

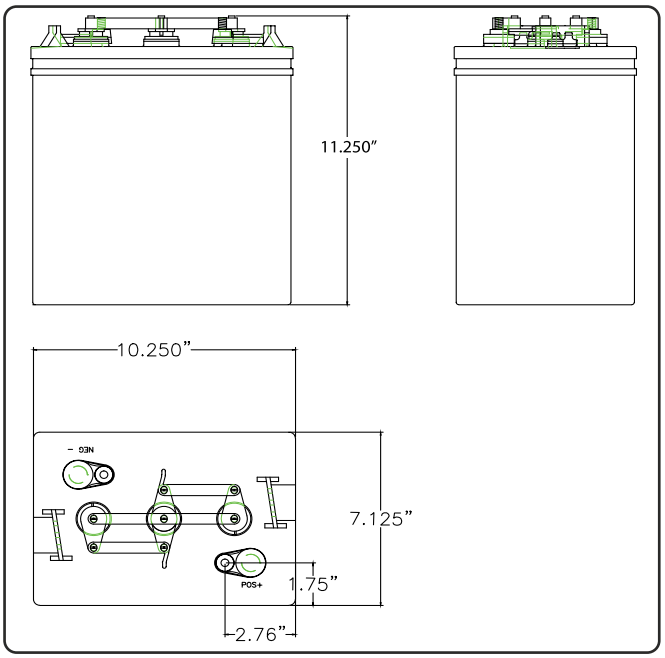

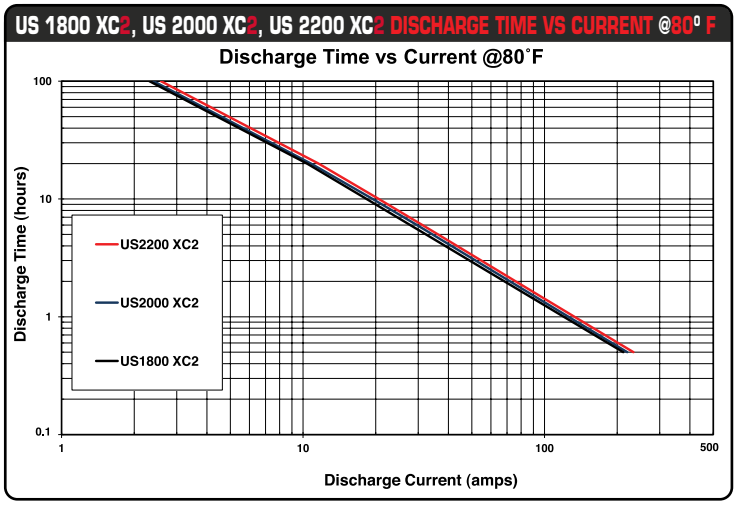

US 125 XC2 -DATA SHEET

Deep Cycle 6 -Volt

Application: Wherever Deep Cycle 6-volt batteries are needed.

Dimensions:
10-1/4 (260)L x 7-1/8 (181)W x 11-1/4 (286)H

Type: Flooded Lead Acid (FLA) non-sealed.

Case material: Polypropylene / Heat Sealed

MADE IN USA

XC2 XTREME CAPACITY

US 125 XC2 - SPECIFICATIONS

BCI Group Size	Model	1-hr Rate	2-hr Rate	5-hr Rate	6-hr Rate	10-hr Rate	20-hr Rate	48-hr Rate	72-hr Rate	100-hr Rate	Voltage	Standard Terminal Type	AMP HOURS (20 HR. RATE)	MINUTES @ 75 AMPS	MINUTES @ 56 AMPS	MINUTES @ 25 AMPS	Length	Width	Height	Wet Weight Lbs (kg)
GC2	US 125 XC2	153	171	198	203	220	242	256	263	269	6	UTL	242	140	198	517	10-1/4 (260)	7-1/8 (181)	11-1/4 (286)	66 (30)

TERMINAL OPTIONS:

VENT CAP OPTIONS:

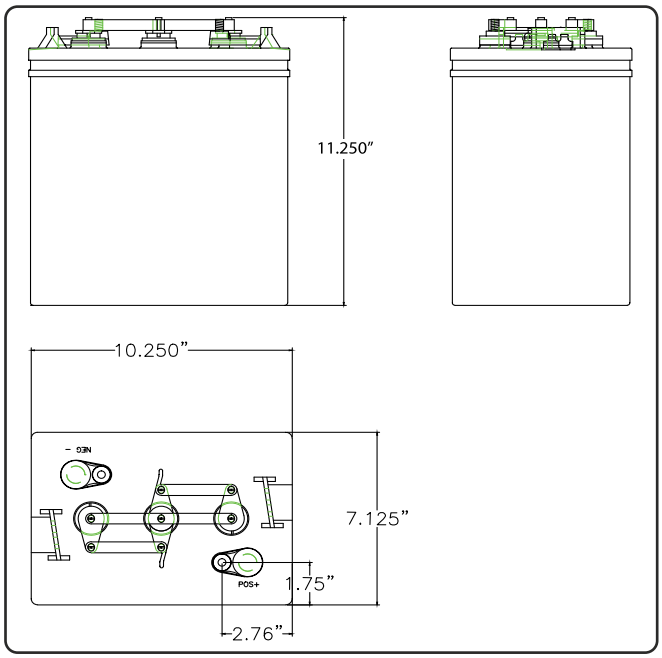

US 125 XC2 DISCHARGE TIME VS CURRENT @80° F

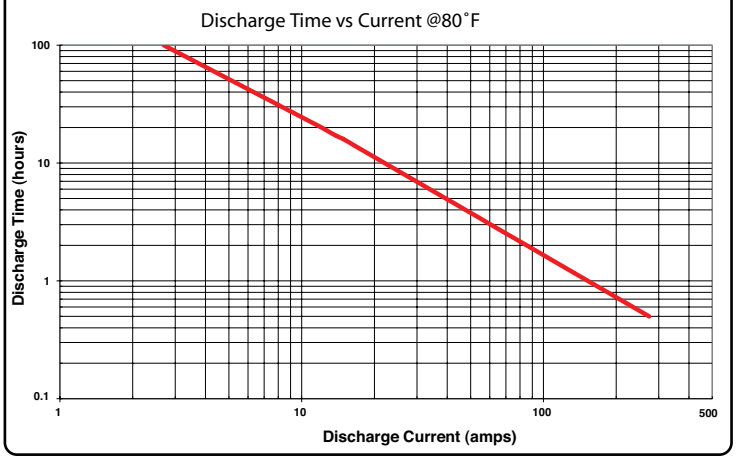

US 145 XC2 -DATA SHEET

Deep Cycle 6 -Volt

Application: Wherever Deep Cycle 6-volt batteries are needed.

Dimensions:
10-1/4 (260)L x 7-1/8 (181)W x 11-7/8 (302)H

Type: Flooded Lead Acid (FLA) non-sealed.

Case material: Polypropylene / Heat Sealed

MADE IN USA

XC XTREME CAPACITY 2

US 145 XC2 - SPECIFICATIONS

BCI Group Size	Model	1-hr Rate	2-hr Rate	5-hr Rate	6-hr Rate	10-hr Rate	20-hr Rate	48-hr Rate	72-hr Rate	100-hr Rate	Voltage	Standard Terminal Type	AMP HOURS (20 HR. RATE)	MINUTES @ 75 AMPS	MINUTES @ 56 AMPS	MINUTES @ 25 AMPS	Length	Width	Height	Wet Weight Lbs (kg)
GC2	US 145 XC2	167	185	213	225	236	251	266	273	279	6	UTL	251	154	217	562	10-1/4 (260)	7-1/8 (181)	11-7/8 (302)	70 (32)

TERMINAL OPTIONS:

VENT CAP OPTIONS:

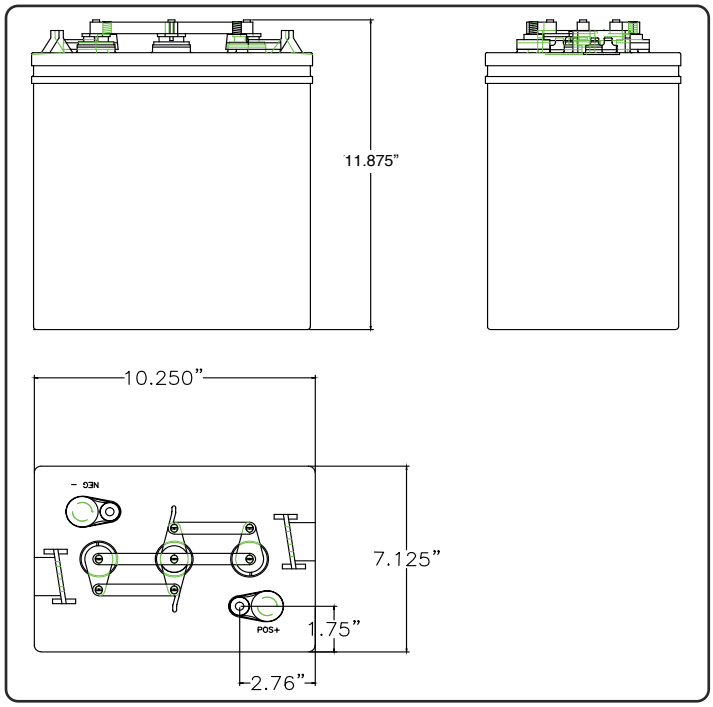

US 145 XC2 DISCHARGE TIME VS CURRENT @80° F

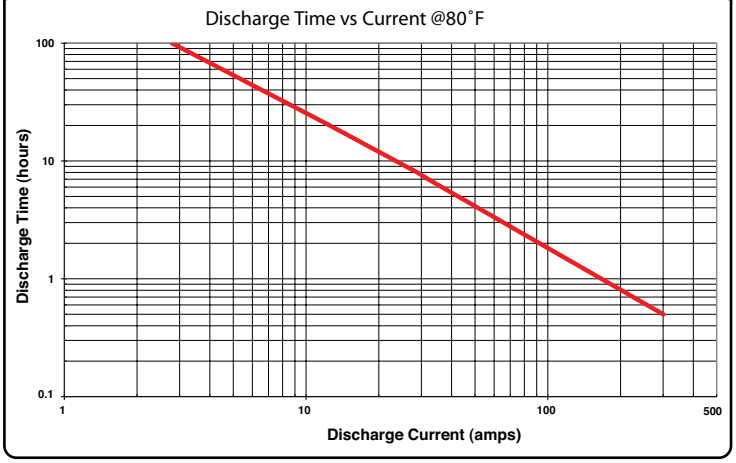

US 250 XC2, US 250HC XC2

DATA SHEET Deep Cycle 6 -Volt

US 250 XC2

US 250HC XC2

Application: Wherever Deep Cycle 6-volt batteries are needed.

Dimensions:
11-5/8 (295)L x 7-1/8 (181)W x 11-5/8 (295)H

Type: Flooded Lead Acid (FLA) non-sealed.

Case material: Polypropylene / Heat Sealed

MADE IN USA

XC2 XTREME CAPACITY

US 250 XC2, US 250HC XC2 - SPECIFICATIONS

BCI Group Size	Model	1-hr Rate	2-hr Rate	5-hr Rate	6-hr Rate	10-hr Rate	20-hr Rate	48-hr Rate	72-hr Rate	100-hr Rate	Voltage	Standard Terminal Type	AMP HOURS (20 HR. RATE)	MINUTES @ 75 AMPS	MINUTES @ 56 AMPS	MINUTES @ 25 AMPS	Length	Width	Height	Wet Weight Lbs (kg)
901	US 250 XC2	173	191	217	223	239	255	270	277	284	6	Offset "S"	255	159	224	570	11-5/8 (295)	7-1/8 (181)	11-5/8 (295)	75 (34)
901	US 250HC XC2	192	211	239	245	263	280	296	304	311	6	Offset "S"	280	178	250	635				77 (35)

TERMINAL OPTIONS:

VENT CAP OPTIONS:

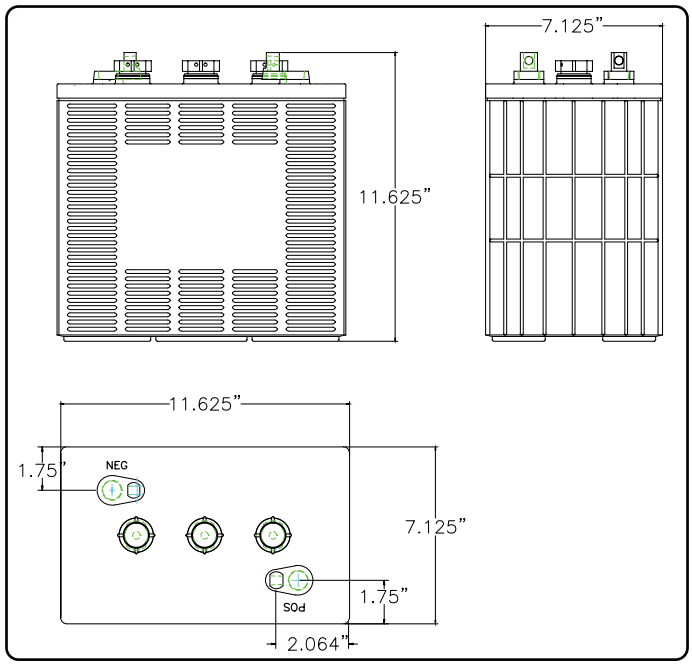

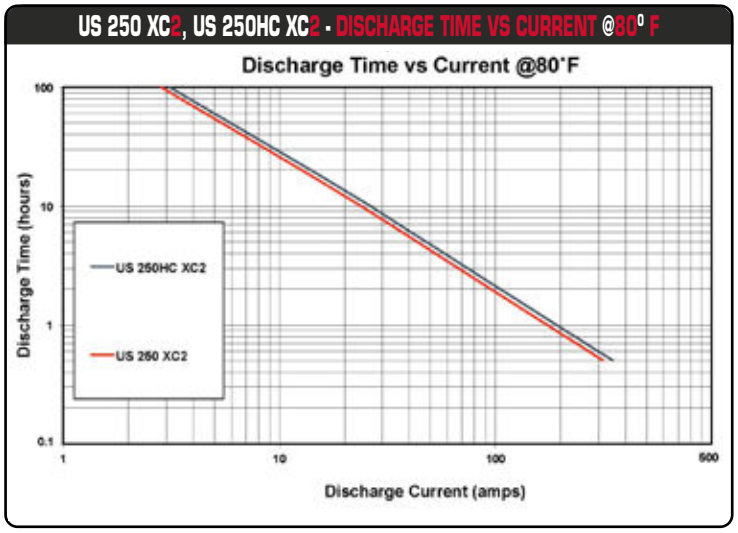

US 305E XC2, US 305 XC2, US 305HC XC2

DATA SHEET Deep Cycle 6 -Volt

Application: Wherever Deep Cycle 6-volt batteries are needed.

Dimensions:
11-7/8 (302)L x 7-1/8 (181)W x 14-5/8 (371)H

Type: Flooded Lead Acid (FLA) non-sealed.

Case material: Polypropylene /Heat Sealed

MADE IN USA

XC2 XTREME CAPACITY

US 305E XC2, US 305 XC2, US 305HC XC2 - SPECIFICATIONS

BCI Group Size	Model	1-hr Rate	2-hr Rate	5-hr Rate	6-hr Rate	10-hr Rate	20-hr Rate	48-hr Rate	72-hr Rate	100-hr Rate	Voltage	Standard Terminal Type	AMP HOURS (20 HR. RATE)	MINUTES @ 75 AMPS	MINUTES @ 56 AMPS	MINUTES @ 25 AMPS	Length	Width	Height	Wet Weight Lbs (kg)
902	US 305E XC2	193	214	245	252	273	290	307	315	322	6	Offset "S"	290	182	256	660	11-7/8 (302)	7-1/8 (181)	14-5/8 (371)	86 (39)
902	US 305 XC2	203	226	261	268	294	310	328	337	345	6	Offset "S"	310	195	276	715				90 (41)
902	US 305HC XC2	220	245	283	291	322	340	360	370	378	6	Offset "S"	340	215	304	790				96 (43)

TERMINAL OPTIONS:

VENT CAP OPTIONS:

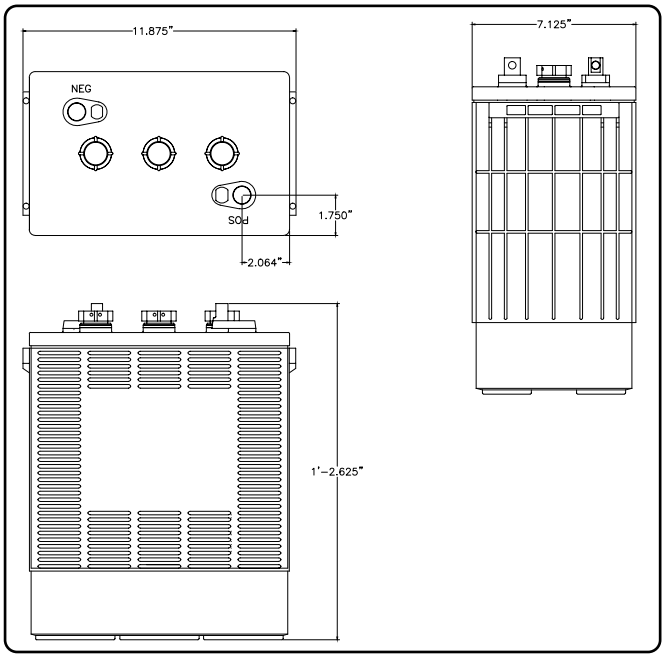

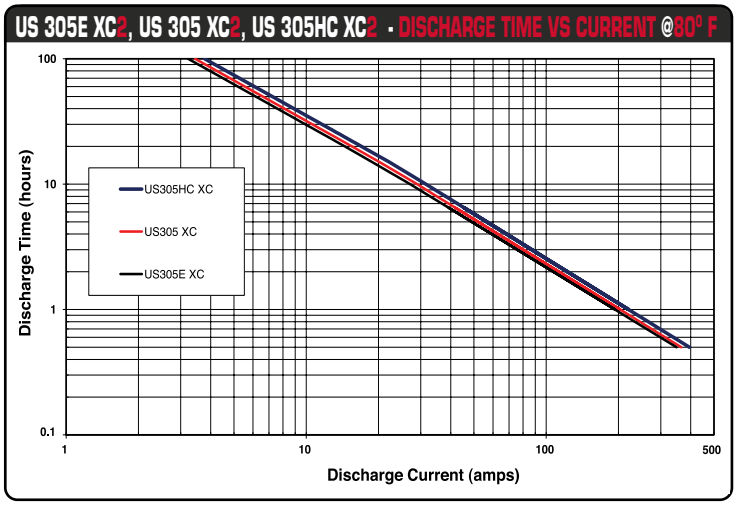

US L16E XC2, US L16 XC2, US L16HC XC2

DATA SHEET Deep Cycle 6 -Volt

Application: Wherever Deep Cycle 6-volt batteries are needed.

Dimensions: (Without Handles)
11-7/8 (302)L x 7-1/8 (181)W x 16-3/4 (425)H
(With Handles)
12-7/16 (315)L x 7-1/8 (181)W x 16-3/4 (425)H

Type: Flooded Lead Acid (FLA) non-sealed.

Case material: Polypropylene / Heat Sealed

MADE IN USA

XTREME CAPACITY 2

US L16E XC2, US L16 XC2, US L16HC XC2 - SPECIFICATIONS

BCI Group Size	Model	1-hr Rate	2-hr Rate	5-hr Rate	6-hr Rate	10-hr Rate	20-hr Rate	48-hr Rate	72-hr Rate	100-hr Rate	Voltage	Standard Terminal Type	AMP HOURS (20 HR. RATE)	MINUTES @ 75 AMPS	MINUTES @ 56 AMPS	MINUTES @ 25 AMPS	Length with Handles	Width	Height	Wet Weight Lbs (kg)
903	US L16E XC2	193	223	270	281	312	360	381	391	400	6	Large "L"	360	198	287	795	12-7/16 (315)	7-1/8 (181)	16-3/4 (425)	104 (47)
903	US L16 XC2	220	251	297	307	337	385	408	419	428	6	Large "L"	385	225	322	865				110 (50)
903	US L16HC XC2	239	272	323	335	368	420	445	457	467	6	Large "L"	420	250	358	965				118 (54)

TERMINAL OPTIONS:

VENT CAP OPTIONS:

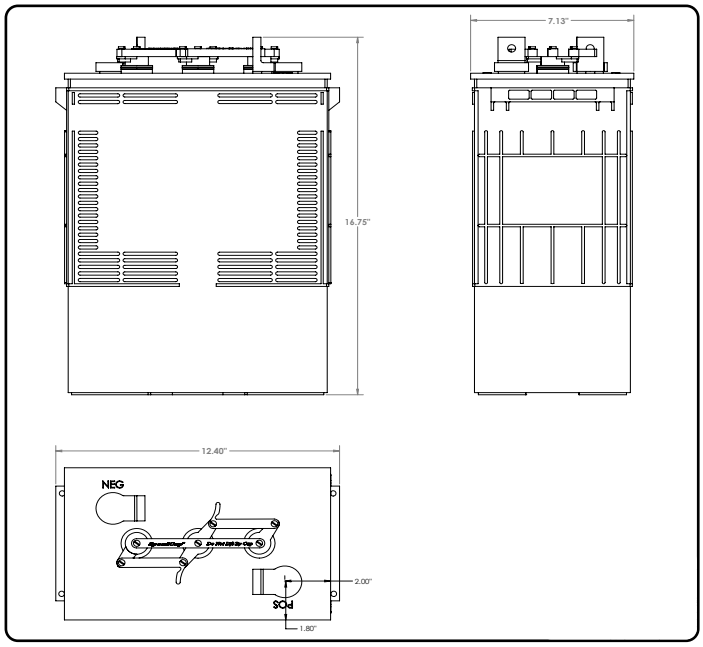

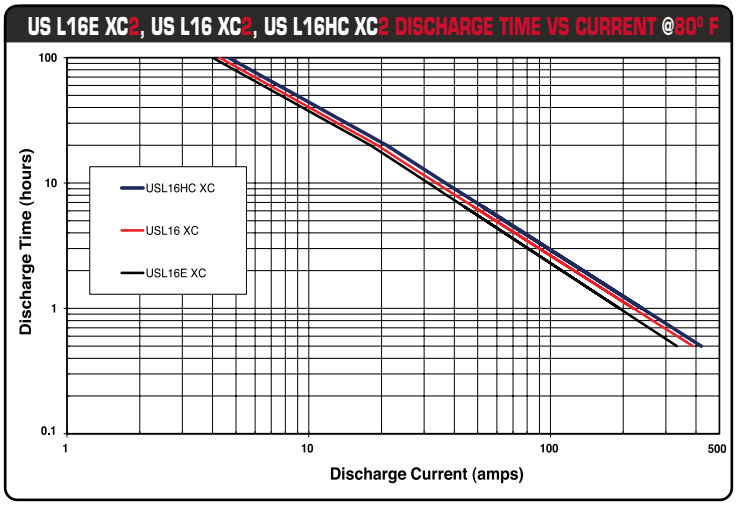

US 100DIN XC2 - DATA SHEET

Deep Cycle 6 -Volt

Application: Wherever Deep Cycle 6-volt batteries are needed.

Dimensions:
9-5/8 (244)L x 7-1/2 (191)W x 10-7/8 (276)H

Type: Flooded Lead Acid (FLA) non-sealed.

Case material: Polypropylene / Heat Sealed

MADE IN USA

XC2 XTREME CAPACITY

US 100DIN XC2 - SPECIFICATIONS

BCI Group Size	Model	1-hr Rate	2-hr Rate	5-hr Rate	6-hr Rate	10-hr Rate	20-hr Rate	48-hr Rate	72-hr Rate	100-hr Rate	Voltage	Standard Terminal Type	AMP HOURS (20 HR. RATE)	MINUTES @ 75 AMPS	MINUTES @ 56 AMPS	MINUTES @ 25 AMPS	Length	Width	Height	Wet Weight Lbs (kg)
DIN GC2	US 100DIN XC2	160	177	199	205	222	247	254	257	260	6	SAE	247	135	204	520	9-5/8 (244)	7-1/2 (191)	10-7/8 (276)	61 (28)

TERMINAL OPTIONS:

STANDARD

VENT CAP OPTIONS:

SpeedCap®

Bayonet

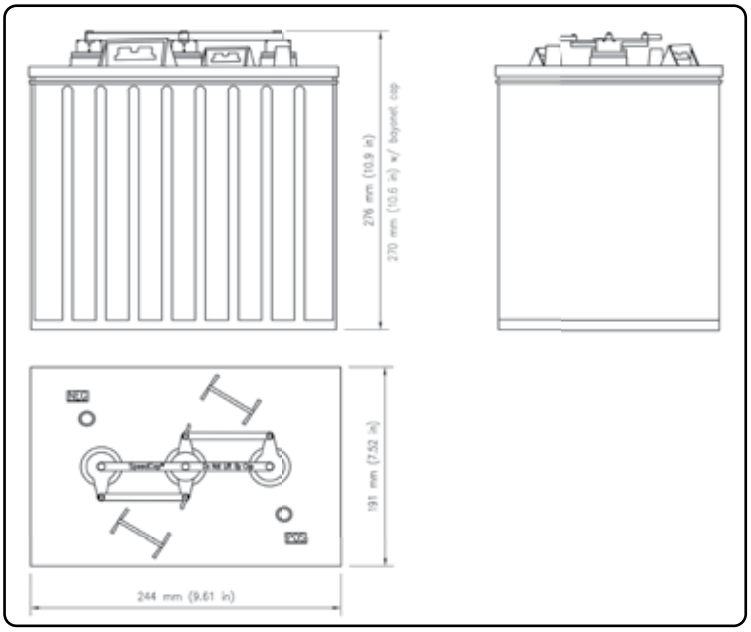

US 100DIN XC2 DISCHARGE TIME VS CURRENT @80° F

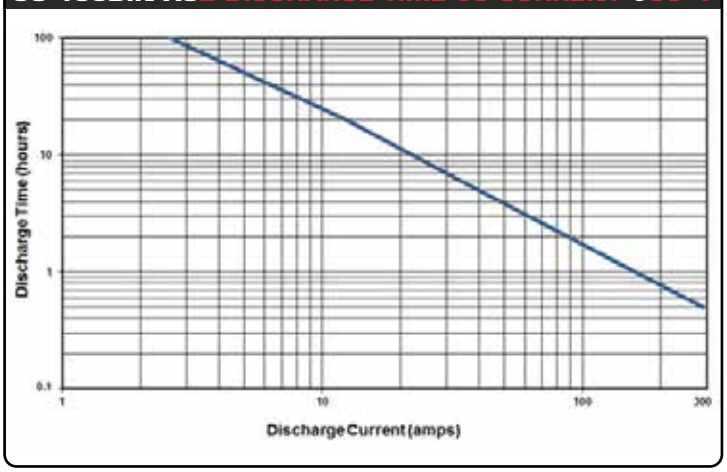

8 -Volt Deep Cycle Batteries

US 8VGCE XC2, US 8VGC XC2, US 8VGCHC XC2

DATA SHEET Deep Cycle 8 -Volt

US 8VGCE XC2

US 8VGC XC2
(**US 8VGCi XC2** cover option, compatable with select OEM watering kits, also available)

US 8VGCHC XC2

Application: Wherever Deep Cycle 8-volt batteries are needed.

Dimensions:
10-1/4 (260)L x 7-1/8 (181)W x 11-1/4 (286)H

Type: Flooded Lead Acid (FLA) non-sealed.

Case material: Polypropylene / Heat Sealed

8 -Volt

MADE IN USA

XC2 XTREME CAPACITY

US 8VGCE XC2, US 8VGC XC2, US 8VGCHC XC2 - SPECIFICATIONS

BCI Group Size	Model	1-hr Rate	2-hr Rate	5-hr Rate	6-hr Rate	10-hr Rate	20-hr Rate	48-hr Rate	72-hr Rate	100-hr Rate	Voltage	Standard Terminal Type	AMP HOURS (20 HR. RATE)	MINUTES @ 75 AMPS	MINUTES @ 56 AMPS	MINUTES @ 25 AMPS	Length	Width	Height	Wet Weight Lbs (kg)
GC8	US 8VGCE XC2	90	105	129	132	142	155	164	169	172	8	UTL	155	75	110	312	10-1/4 (260)	7-1/8 (181)	11-1/4 (286)	60 (27)
GC8	US 8VGC XC2	96	111	133	138	151	170	180	185	189	8	UTL	170	82	118	325				62 (28)
GC8	US 8VGCHC XC2	109	124	147	152	164	183	194	199	203	8	UTL	183	95	136	365				67 (30)

TERMINAL OPTIONS:

VENT CAP OPTIONS:

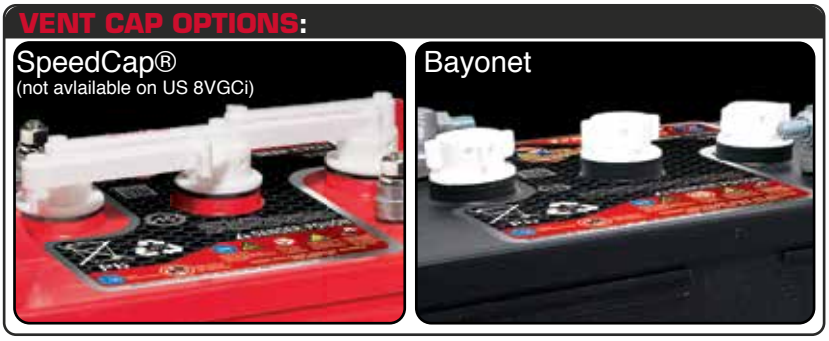

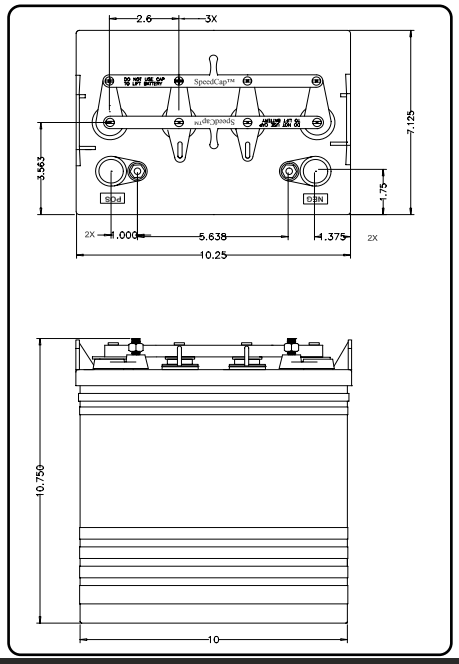

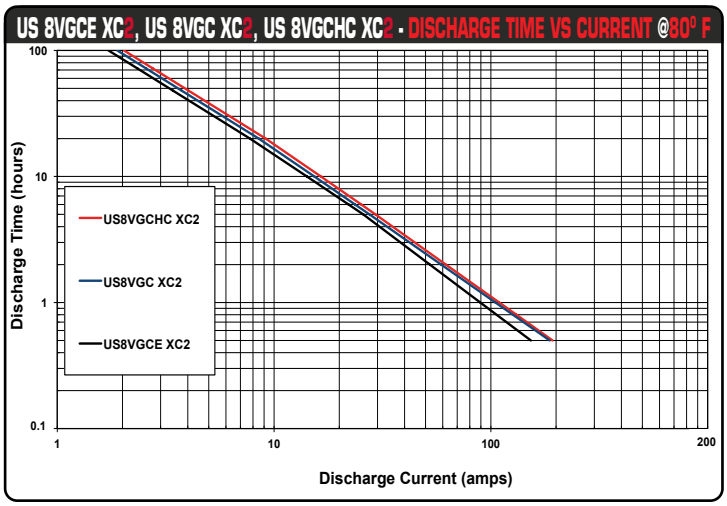

US 8VHATB XC2 - DATA SHEET

Deep Cycle 8 -Volt

Application: Wherever Deep Cycle 8-volt batteries are needed.

Dimensions:
10-1/4 (260)L x 7-1/8 (181)W x 11-7/8 (302)H

Type: Flooded Lead Acid (FLA) non-sealed.

Case material: Polypropylene / Heat Sealed

MADE IN USA

XC2 XTREME CAPACITY

US 8VHATB XC2 - SPECIFICATIONS

BCI Group Size	Model	1-hr Rate	2-hr Rate	5-hr Rate	6-hr Rate	10-hr Rate	20-hr Rate	48-hr Rate	72-hr Rate	100-hr Rate	Voltage	Standard Terminal Type	AMP HOURS (20 HR. RATE)	MINUTES @ 75 AMPS	MINUTES @ 56 AMPS	MINUTES @ 25 AMPS	Length	Width	Height	Wet Weight Lbs (kg)
GC8H	US 8VHATB	128	145	170	177	188	205	216	221	225	8	UTL	205	115	164	435	10-1/4 (260)	7-1/8 (181)	11-7/8 (302)	73 (33)

TERMINAL OPTIONS:

VENT CAP OPTIONS:

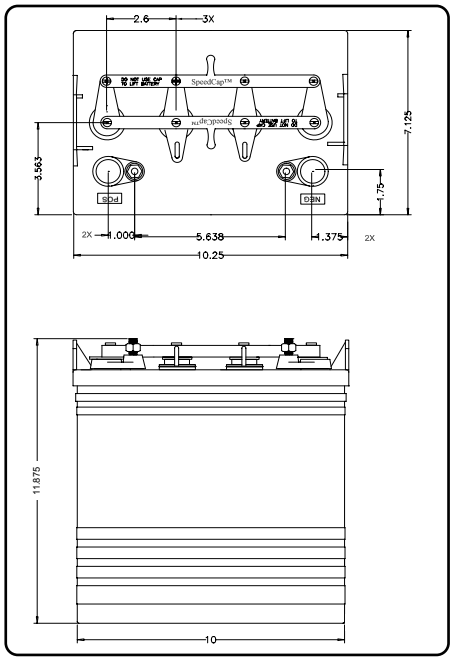

US 8VHATB XC2 - DISCHARGE TIME VS CURRENT @30° F

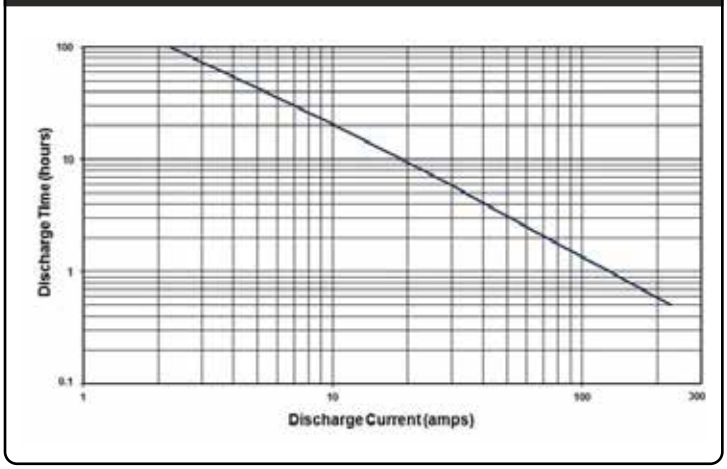

12 -Volt Deep Cycle Batteries

US 24DC XC2 - DATA SHEET

Deep Cycle 12 -Volt

Application: Wherever Deep Cycle 12-volt batteries are needed.

Dimensions:
10-7/8 (276)L x 6-3/4 (171)W x 9-3/8 (238)H

Type: Flooded Lead Acid (FLA) non-sealed.

Case material: Polypropylene / Heat Sealed

MADE IN USA

XC2 XTREME CAPACITY

US 24DC XC2 - SPECIFICATIONS

BCI Group Size	Model	1-hr Rate	2-hr Rate	5-hr Rate	6-hr Rate	10-hr Rate	20-hr Rate	48-hr Rate	72-hr Rate	100-hr Rate	Voltage	Standard Terminal Type	AMP HOURS (20 HR. RATE)	MINUTES @ 75 AMPS	MINUTES @ 56 AMPS	MINUTES @ 25 AMPS	Length	Width	Height	Wet Weight Lbs (kg)
24	US 24DC XC2	52	58	68	70	76	85	90	92	95	12	SAE/bolt	85	38	54	145	10-7/8 (276)	6-3/4 (171)	9-3/8 (238)	51 (23)

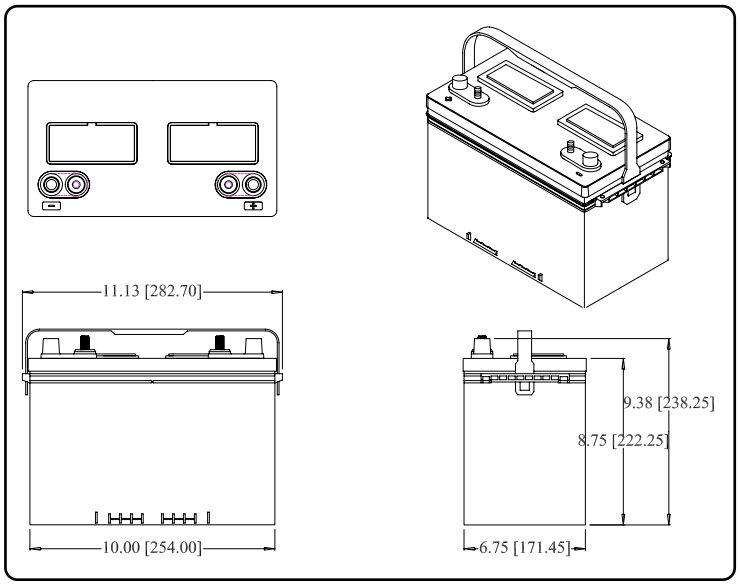

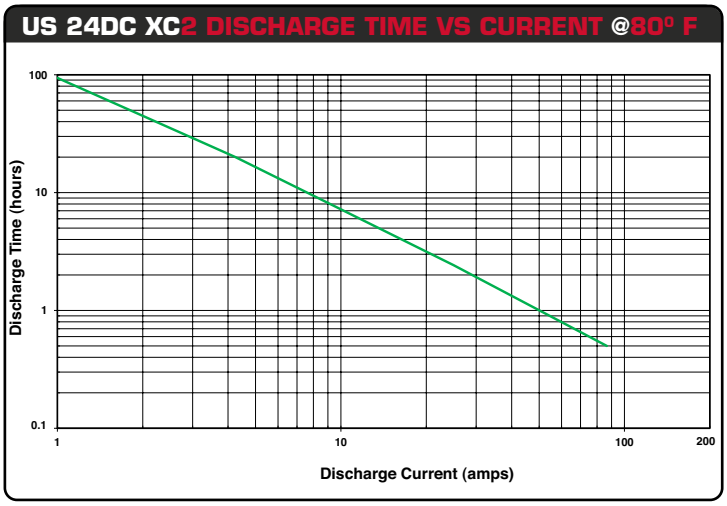

US 27DC XC2 - DATA SHEET

Deep Cycle 12 -Volt

Application: Wherever Deep Cycle 12-volt batteries are needed.

Dimensions:
12-3/4 (324)L x 6-3/4 (171)W x 9-3/4 (248)H

Type: Flooded Lead Acid (FLA) non-sealed.

Case material: Polypropylene / Heat Sealed

12 -Volt

MADE IN USA

XC2 XTREME CAPACITY 2

US 27DC XC2 - SPECIFICATIONS

BCI Group Size	Model	1-hr Rate	2-hr Rate	5-hr Rate	6-hr Rate	10-hr Rate	20-hr Rate	48-hr Rate	72-hr Rate	100-hr Rate	Voltage	Standard Terminal Type	AMP HOURS (20 HR. RATE)	MINUTES @ 75 AMPS	MINUTES @ 56 AMPS	MINUTES @ 25 AMPS	Length	Width	Height	Wet Weight Lbs (kg)
27	US 27DC XC2	69	78	89	91	97	105	111	114	117	12	SAE/bolt	105	54	77	205	12-3/4 (324)	6-3/4 (171)	9-3/4 (248)	59 (26.6)

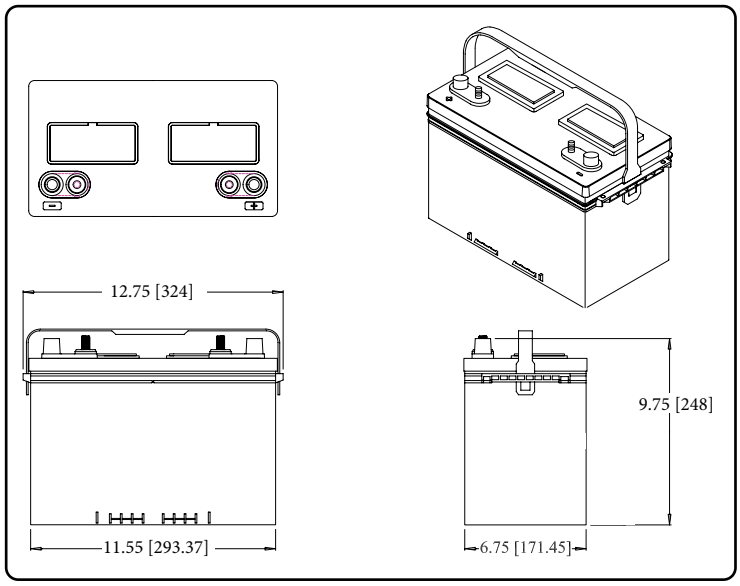

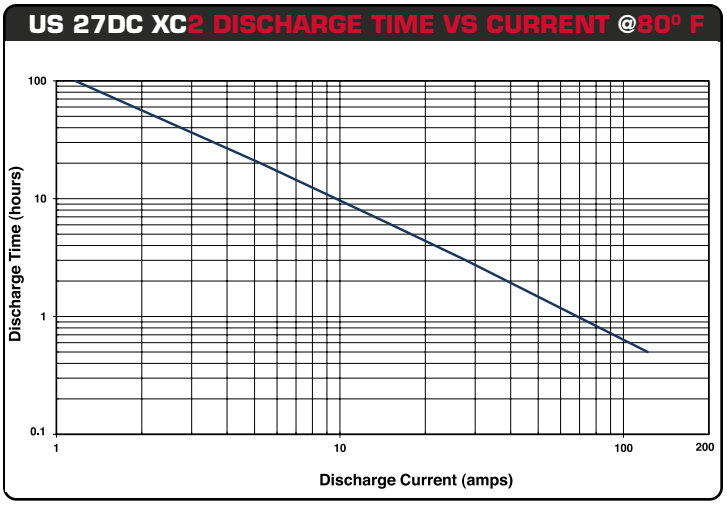

US 31DC XC2 - DATA SHEET

Deep Cycle 12 -Volt

Application: Wherever Deep Cycle 12-volt batteries are needed.

Dimensions:
13 (330)L x 6-3/4 (171)W x 9-5/8 (243)H

Type: Flooded Lead Acid (FLA) non-sealed.

Case material: Polypropylene / Heat Sealed

MADE IN USA

XC XTREME CAPACITY 2

US 31DC XC2 - SPECIFICATIONS

BCI Group Size	Model	1-hr Rate	2-hr Rate	5-hr Rate	6-hr Rate	10-hr Rate	20-hr Rate	48-hr Rate	72-hr Rate	100-hr Rate	Voltage	Standard Terminal Type	AMP HOURS (20 HR. RATE)	MINUTES @ 75 AMPS	MINUTES @ 56 AMPS	MINUTES @ 25 AMPS	Length	Width	Height	Wet Weight Lbs (kg)
31	US 31DC XC2	74	84	99	103	114	130	138	141	144	12	SAE/bolt	130	59	84	225	13 (330)	6-3/4 (171)	9-5/8 (243)	66 (29.7)

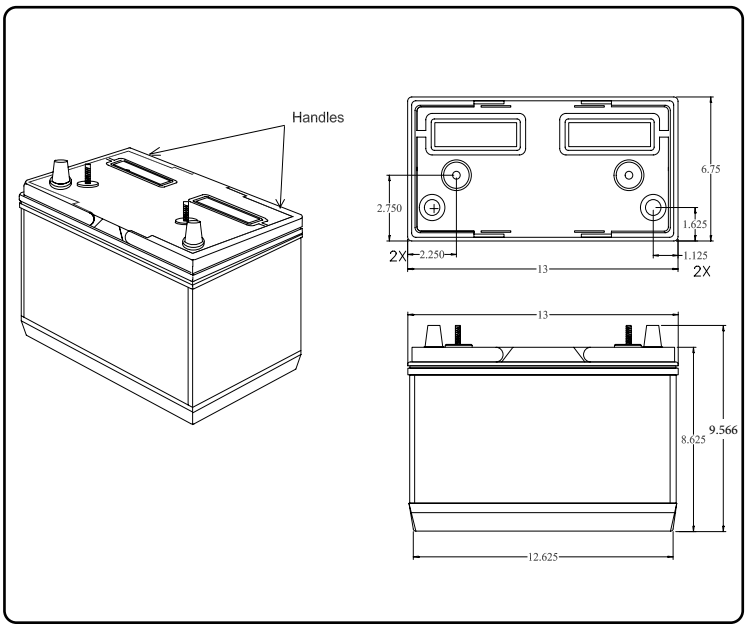

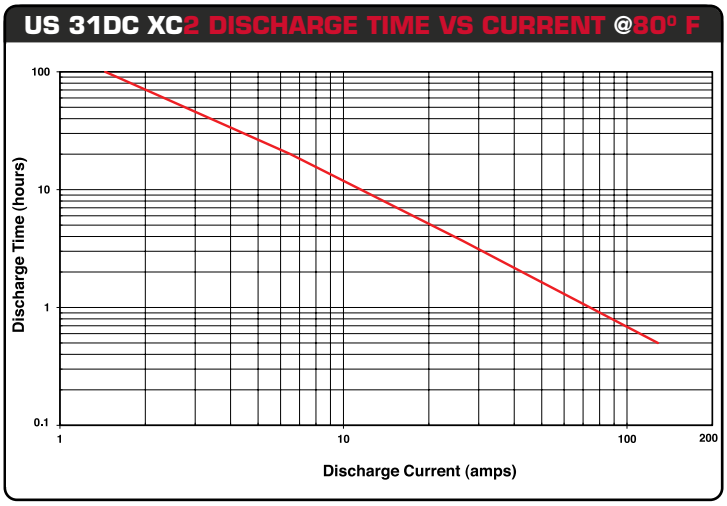

US 12VE XC2 - DATA SHEET

Deep Cycle 12 -Volt

Application: Wherever Deep Cycle 12-volt batteries are needed.

Dimensions: (Without Handles)
13-1/8 (333)L x 7-1/16 (179)W x 11-3/8 (289)H
(With Handles)
14 (355)L x 7-1/16 (179)W x 11-3/8 (289)H

Type: Flooded Lead Acid (FLA) non-sealed.

Case material: Polypropylene / Heat Sealed

MADE IN USA

XC2 XTREME CAPACITY

12 -Volt

US 12VE XC2 - SPECIFICATIONS

BCI Group Size	Model	1-hr Rate	2-hr Rate	5-hr Rate	6-hr Rate	10-hr Rate	20-hr Rate	48-hr Rate	72-hr Rate	100-hr Rate	Voltage	Standard Terminal Type	AMP HOURS (20 HR. RATE)	MINUTES @ 75 AMPS	MINUTES @ 56 AMPS	MINUTES @ 25 AMPS	Length with Handles	Width	Height	Wet Weight Lbs (kg)
GC12	US 12VE XC2	77	92	115	118	129	145	155	158	161	12	UTL	145	62	95	270	14 (355)	7-1/16 (179)	11-3/8 (289)	81(36.7)

TERMINAL OPTIONS:

VENT CAP OPTIONS:

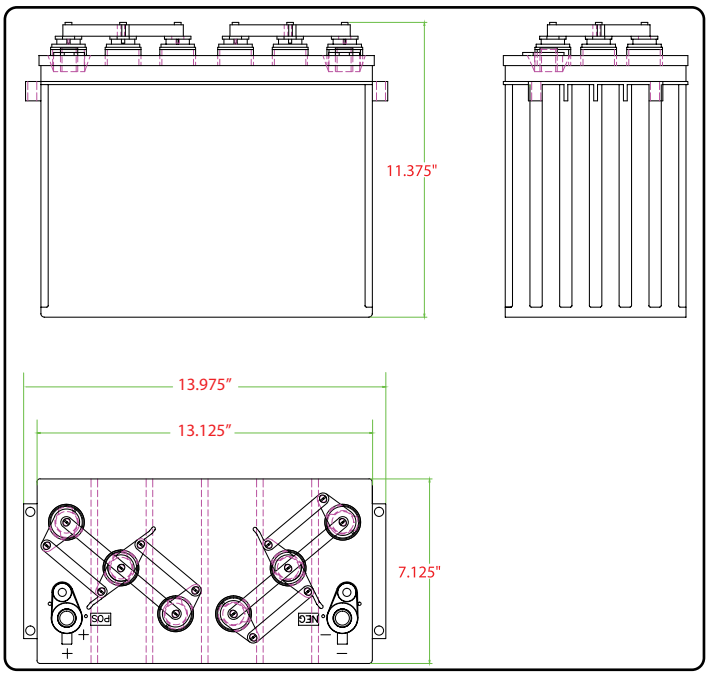

US 12VE XC2 DISCHARGE TIME VS CURRENT @80° F

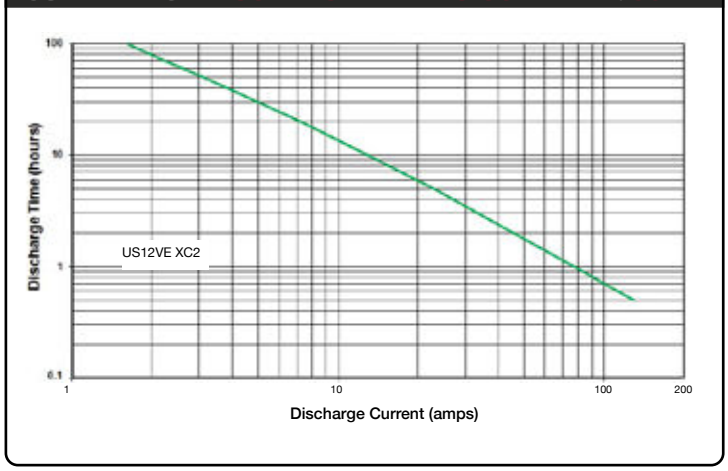

US 12VRX XC2 - DATA SHEET

Deep Cycle 12 -Volt

Application: Wherever Deep Cycle 12-volt batteries are needed.

Dimensions: (Without Handles)
13-1/8 (333)L x 7-1/16 (179)W x 11-3/8 (289)H
(With Handles)
14 (355)L x 7-1/16 (179)W x 11-3/8 (289)H

Type: Flooded Lead Acid (FLA) non-sealed.

Case material: Polypropylene / Heat Sealed

MADE IN USA

XC2 XTREME CAPACITY

US 12VRX XC2 - SPECIFICATIONS

BCI Group Size	Model	1-hr Rate	2-hr Rate	5-hr Rate	6-hr Rate	10-hr Rate	20-hr Rate	48-hr Rate	72-hr Rate	100-hr Rate	Voltage	Standard Terminal Type	AMP HOURS (20 HR. RATE)	MINUTES @ 75 AMPS	MINUTES @ 56 AMPS	MINUTES @ 25 AMPS	Length with Handles	Width	Height	Wet Weight Lbs (kg)
GC12	US 12VRX XC2	92	104	122	126	138	155	164	169	172	12	Molded-In UTL	155	77	110	292	14 (355)	7-1/16 (179)	11-3/8 (289)	86 (39)

TERMINAL OPTIONS:

STANDARD

*Standard on US 12VRX
Available only on US 12VRX

VENT CAP OPTIONS:

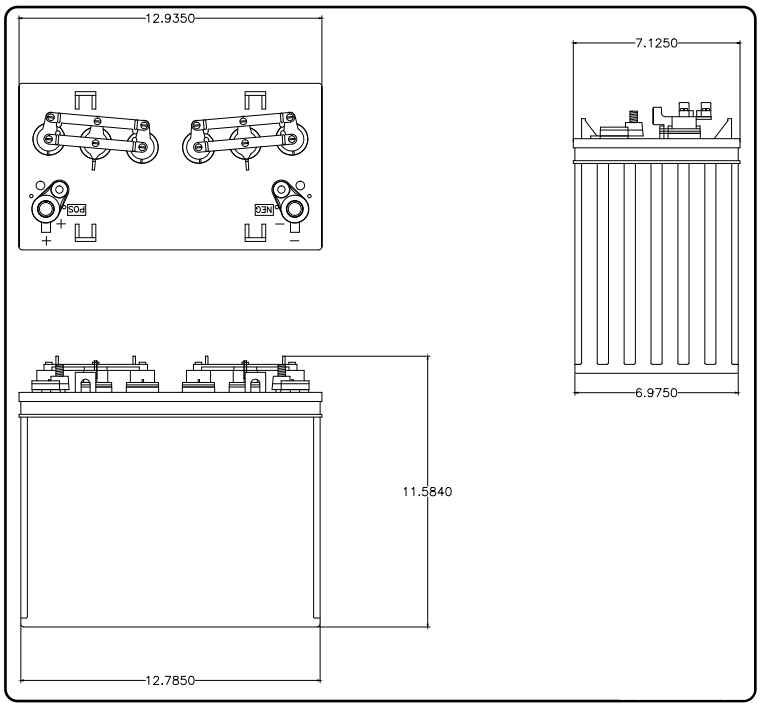

US 12VRX XC2 DISCHARGE TIME VS CURRENT @80° F

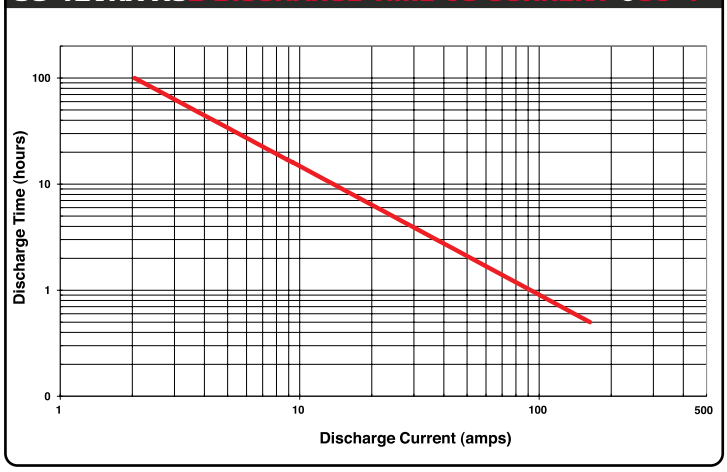

US 185E XC2, US 185 XC2, US 185HC XC2

DATA SHEET Deep Cycle 12 -Volt

Application: Wherever Deep Cycle 12-volt batteries are needed.

Dimensions:
15-5/8 (397)L x 7-1/16 (179)W x 14-7/8 (378)H

Type: Flooded Lead Acid (FLA) non-sealed.

Case material: Polypropylene / Heat Sealed

12 -Volt

US 185E XC2, US 185 XC2, US 185HC XC2 - SPECIFICATIONS

BCI Group Size	Model	1-hr Rate	2-hr Rate	5-hr Rate	6-hr Rate	10-hr Rate	20-hr Rate	48-hr Rate	72-hr Rate	100-hr Rate	Voltage	Standard Terminal Type	AMP HOURS (20 HR. RATE)	MINUTES @ 75 AMPS	MINUTES @ 56 AMPS	MINUTES @ 25 AMPS	Length	Width	Height	Wet Weight Lbs (kg)
921	US 185E XC2	107	122	144	148	163	185	196	201	206	12	Offset "S"	185	93	133	355	15-5/8 (397)	7-1/16 (179)	14-7/8 (378)	105 (47.8)
921	US 185 XC2	120	135	158	163	178	200	212	217	222	12	Offset "S"	200	106	151	398				109 (49.4)
921	US 185HC XC2	130	147	172	178	195	220	233	239	244	12	Offset "S"	220	117	167	443				120 (54.4)

TERMINAL OPTIONS:

VENT CAP OPTIONS:

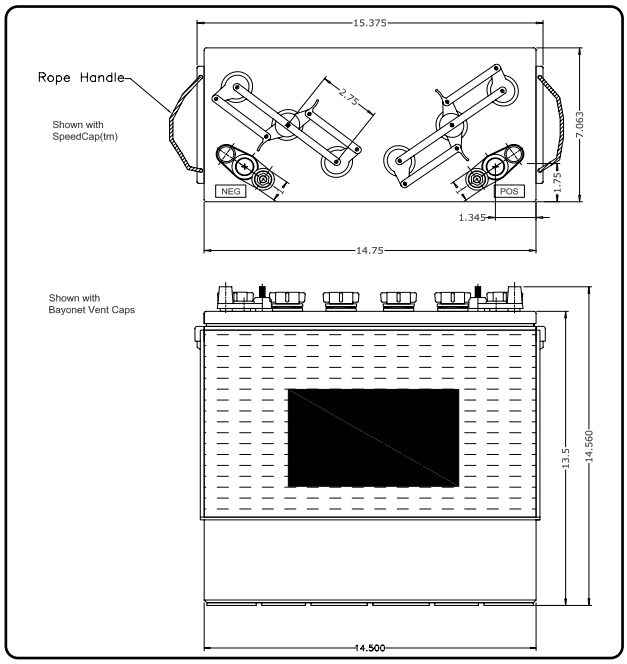

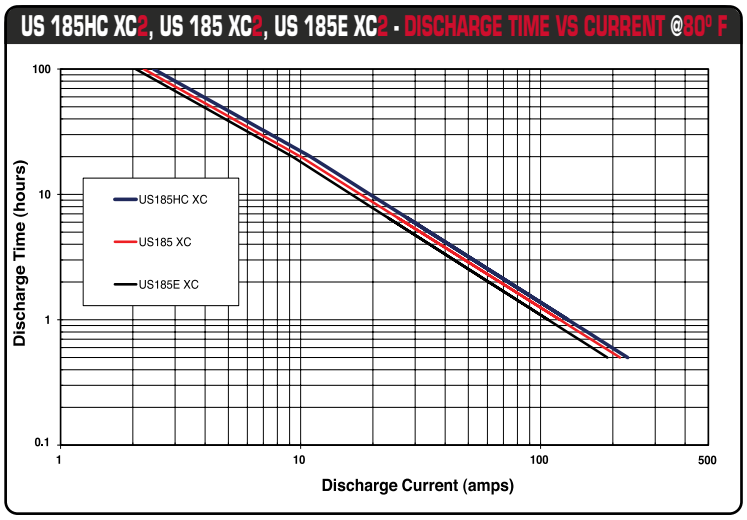

RE 6 & 2 -Volt Deep Cycle Batteries

US REGC2H XC2 - DATA SHEET

Deep Cycle 6 -Volt

Application: Renewable & Wherever Deep Cycle 6-volt batteries are needed.

Dimensions:
10-1/4 (260)L x 7-1/8 (181)W x 11-7/8 (302)H

Type: Flooded Lead Acid (FLA) non-sealed.

Case material: Polypropylene / Heat Sealed

MADE IN USA

XC2 XTREME CAPACITY

RE 6 -Volt

US REGC2H XC2 SPECIFICATIONS

BCI Group Size	Model	1-hr Rate	2-hr Rate	5-hr Rate	6-hr Rate	10-hr Rate	20-hr Rate	48-hr Rate	72-hr Rate	100-hr Rate	Voltage	Standard Terminal Type	AMP HOURS (20 HR. RATE)	MINUTES @ 75 AMPS	MINUTES @ 56 AMPS	MINUTES @ 25 AMPS	Length	Width	Height	Wet Weight Lbs (kg)
GC2	US REGC2H XC2	149	167	194	200	217	242	256	263	269	6	UTL	242	136	193	507	10-1/4 (260)	7-1/8 (181)	11-7/8 (302)	68 (30.8)

TERMINAL OPTIONS:

VENT CAP OPTIONS:

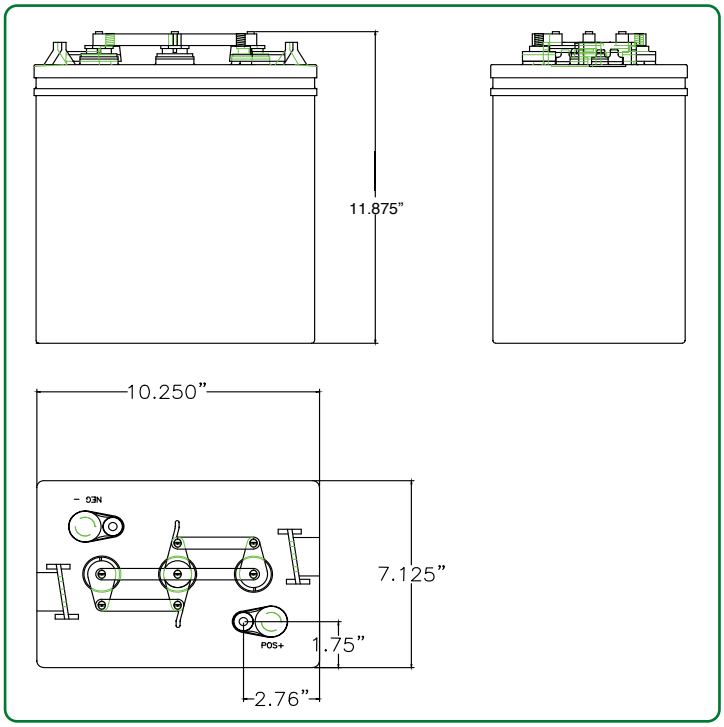

US REGC2HXC2 DISCHARGE TIME VS CURRENT @80° F

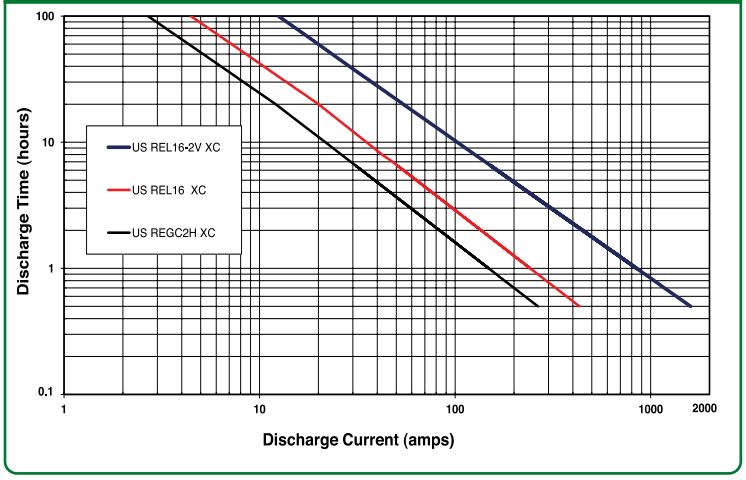

US REL16 XC2 - DATA SHEET

Deep Cycle 6 -Volt

Application: Renewable & wherever Deep Cycle 6-volt batteries are needed.

Dimensions: (Without Handles)
11-7/8 (302)L x 7-1/8 (181)W x 16-3/4 (425)H
(With Handles)
12-7/16 (315)L x 7-1/8 (181)W x 16-3/4 (425)H

Type: Flooded Lead Acid (FLA) non-sealed.

Case material: Polypropylene / Heat Sealed

MADE IN USA

XC2 XTREME CAPACITY

US REL16 XC2 SPECIFICATIONS

BCI Group Size	Model	1-hr Rate	2-hr Rate	5-hr Rate	6-hr Rate	10-hr Rate	20-hr Rate	48-hr Rate	72-hr Rate	100-hr Rate	Voltage	Standard Terminal Type	AMP HOURS (20 HR. RATE)	MINUTES @ 75 AMPS	MINUTES @ 56 AMPS	MINUTES @ 25 AMPS	Length with Handles	Width	Height	Wet Weight Lbs (kg)
903	US REL16 XC2	242	272	317	326	352	401	425	436	446	6	Large"L"	401	245	348	915	12-7/16 (315)	7-1/8 (181)	16-3/4 (425)	112 (50.8)

TERMINAL OPTIONS:

VENT CAP OPTIONS:

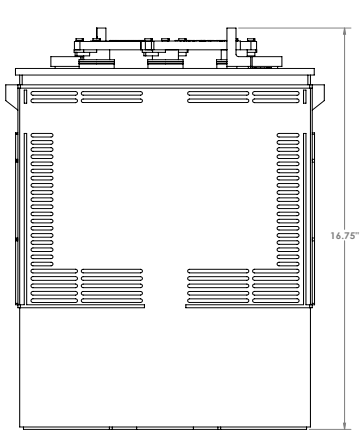

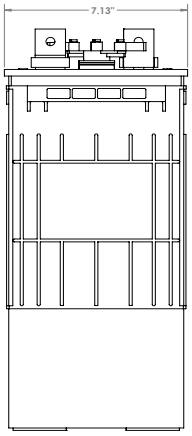

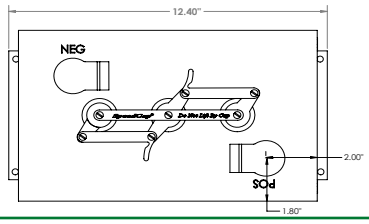

US RE L16 XC2 DISCHARGE TIME VS CURRENT @80° F

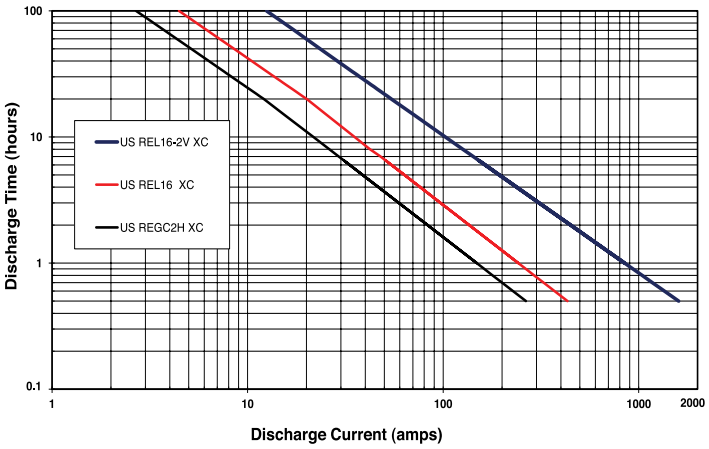

US REL16 2V XC2 - DATA SHEET

Deep Cycle 2 -Volt

Application: Renewable & wherever Deep Cycle 2-volt batteries are needed.

Dimensions: (Without Handles)
11-7/8 (302)L x 7-1/8 (181)W x 16-3/4 (425)H
(With Handles)
12-7/16 (315)L x 7-1/8 (181)W x 16-3/4 (425)H

Type: Flooded Lead Acid (FLA) non-sealed.

Case material: Polypropylene / Heat Sealed

MADE IN USA

XC XTREME CAPACITY 2

US REL16 2V XC2 SPECIFICATIONS

BCI Group Size	Model	1-hr Rate	2-hr Rate	5-hr Rate	6-hr Rate	10-hr Rate	20-hr Rate	48-hr Rate	72-hr Rate	100-hr Rate	Voltage	Standard Terminal Type	AMP HOURS (20 HR. RATE)	MINUTES @ 75 AMPS	MINUTES @ 56 AMPS	MINUTES @ 25 AMPS	Length with Handles	Width	Height	Wet Weight Lbs (kg)
903	US REL16-2V XC2	832	886	962	978	1024	1100	1179	1218	1250	2	Large"L"	1100	845	1177	2826	12-7/16 (315)	7-1/8 (181)	16-3/4 (425)	114 (51.7)

TERMINAL OPTIONS:

VENT CAP OPTIONS:

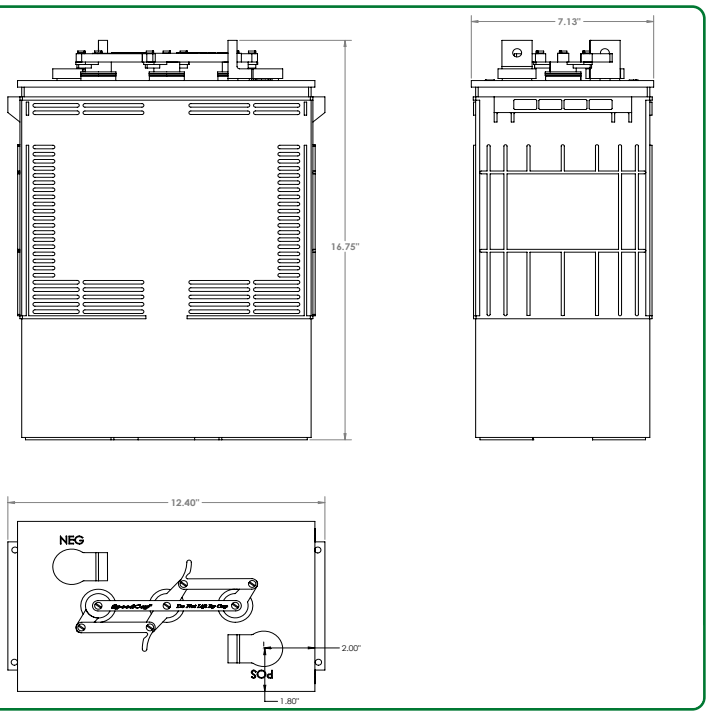

US RE L16 2V XC2 DISCHARGE TIME VS CURRENT @80° F

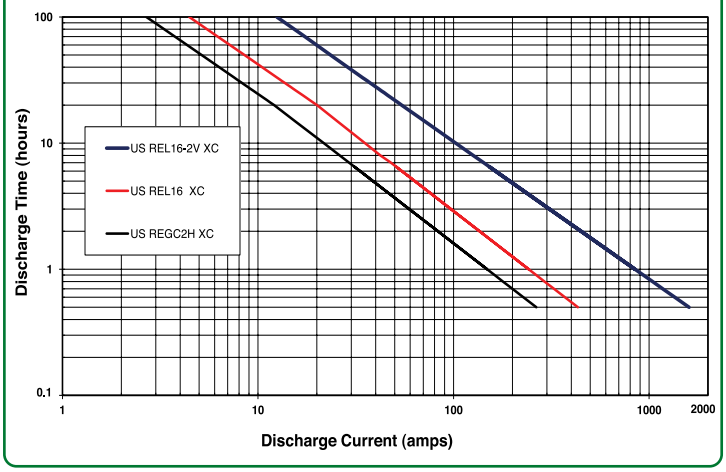

RE 2 -Volt

Battery Watering Technologies Single Point Watering System

feature innovative valve designs, including the new **SENSE SMART VALVE**™ available exclusively for U.S. Battery. All BWT valves are manufactured with the highest quality materials that keep all working parts above the battery cell. The spark arrestor makes this the safest watering system available. The BWT system fits on every FLA battery we manufacture and on every configuration. Water flows through a single connection reducing labor cost by accurately filling each battery set in less than 30 seconds!

The innovative clip-in valve makes installation of pre-strung systems fast and easy. BWT also offers several water delivery options, the Gravity Fill System is ideal for a small number of batteries when a water source is not readily available. The 2.5 gallon gravity fill tank should be placed at least three feet above the battery tops to ensure sufficient water flow. The Direct Fill Link features a built-in flow indicator and pressure regulator. The pressure sensitive handle reduces pressure down to 10 psi and will handle incoming pressure up to 100 psi. Allowing it to be connected directly to a water source.

model VB-TBU

Battery Watering Technologies

MADE IN USA

The Pro-Fill On-Board Battery Watering System by Flow-Rite

is specifically designed for use with "golf car" style batteries commonly found in golf cars, sweepers, scrubbers, RVs, pallet jacks, and small solar systems. Based on the same technology as Flow-Rite's Millennium Plus+ valves, the Pro-Fill system is compatible with all Millennium water supplies. The Pro-Fill on-board battery watering system works by replacing the battery's existing vent caps with

MADE IN USA

valves that are interconnected by manifolds and tubing, allowing the user to fill all cells of the battery from a single remote location. Each valve independently shuts off water flow to it's cell when the proper electrolyte level is reached. This allows the operator to fill the batteries perfectly every time without having to monitor each individual cell.

PRO-FILL™
ON-BOARD BATTERY WATERING SYSTEM
by FLOW-RITE

CHARGING INSTRUCTIONS:

Following is the charging recommendation and charging profile using 2 stage chargers for US Battery deep cycle products. *Equalization and float charge modes are not considered to be one of the stages in a charging profile.

1. Bulk Charge — Constant current @~10% of C/20 Ah in amps to 2.45+/-0.05 volts per cell (e.g. 7.35 volts +/-0.15 volts per 6 volt battery)
2. Absorption Charge — Constant voltage (2.45+/-0.05 vpc) to 3% of C/20 Ah in amps then hold for 2-3 hours and terminate charge. Charge termination can be by maximum time (2-4 hr) or dV/dt (4 mv/cell per hour)

- (Optional Float Charge) — Constant voltage 2.17 vpc (6.51 volts per 6 volt battery) for unlimited time
- Equalization Charge — Constant voltage (2.55+/-0.05 vpc) extended for 1-3 hours after normal charge cycle (repeat every 30 days)

Notes: Charge time from full discharge is 9-12 hours.
Absorption charge time is determined by the battery but will usually be ~3 hours at 2.45 volts per cell.
Float time is unlimited at 2.17 volts per cell.
Specific gravity at full charge is 1.270 minimum

Battery temperature adjustment: Reduce the voltage by 0.028 Volts per cell for every 10°F above 80°F, increase by the same amount for temperatures below 80°F.

Deep cycle batteries need to be equalized periodically. Equalizing is an extended, low current charge performed after the normal charge cycle. This extra charge helps keep all cells in balance. Actively used batteries should be equalized once per month. Manually timed chargers should have the charge time extended approximately 3 hours. Automatically controlled chargers should be unplugged and reconnected after completing a charge.

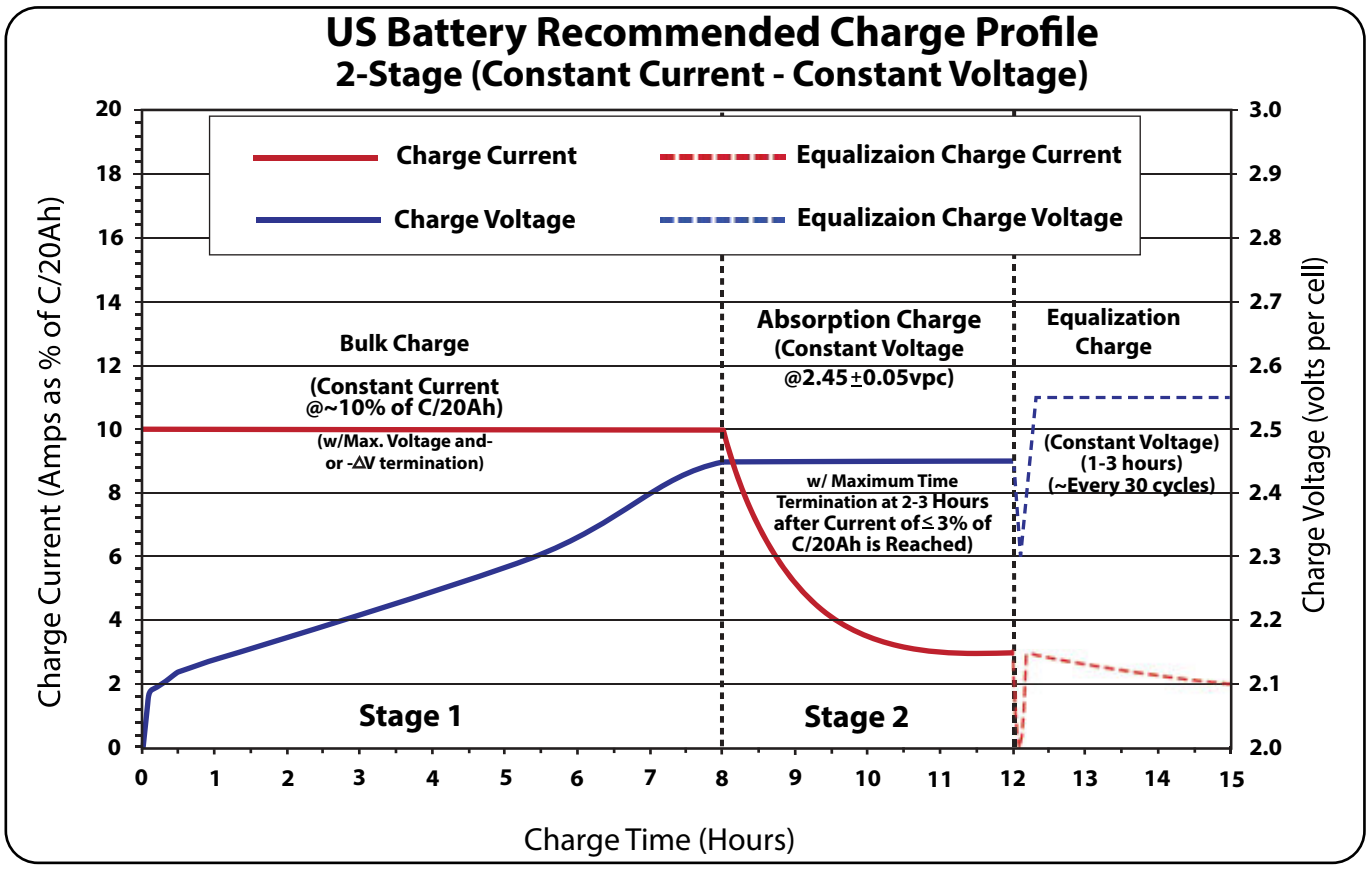

EXPECTED LIFE CYCLES VS. DOD (XC, XC2 & AGM)

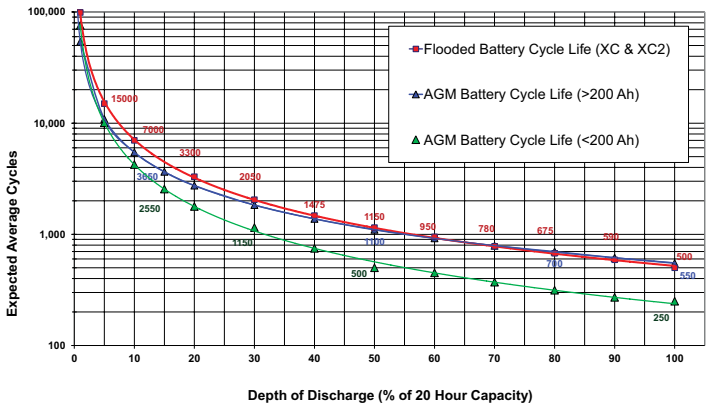

BATTERY % CAPACITY VS TEMP

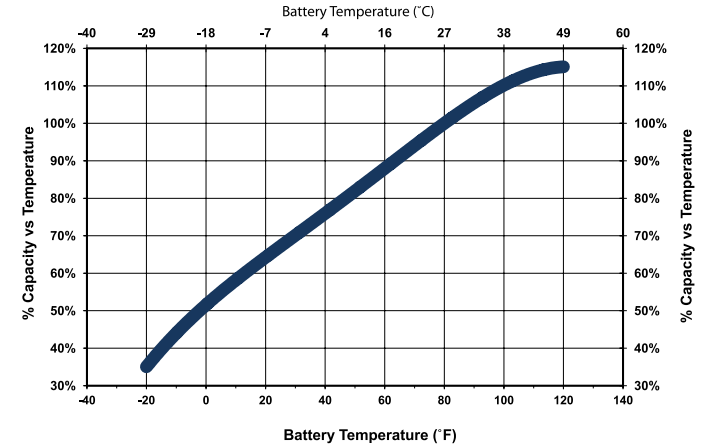

U.S. Battery Recommended Terminal Torque and Connection Hardware

U.S. Battery Terminal Type	Recommended Torque (in-lb)	Recommended Torque (ft-lb)	Recommended Connection Hardware
UTL	95-105	7.9-8.8	[1]SS Hexnut with Lock Washer
Molded-In UTL	95-105	7.9-8.8	[1]SS Hexnut with Lock Washer
UT	95-105	7.9-8.8	[1]SS Hexnut with Lock Washer
Flat Block	95-105	7.9-8.8	[1]SS Hexnut with Lock Washer
Dual	95-105	7.9-8.8	[1/6]SS Hexnut with Lock Washer
DC Marine	95-105	7.9-8.8	[2]SS Hexnut with Lock Washer
Off-Set "S"	100-120	8.3-10	[3]Zn or SS Bolt w/Hexnut & Lock Washer
Flag	100-120	8.3-10	[4]Zn or SS Bolt w/Hexnut & Lock Washer
Large "L"	100-120	8.3-10.0	[4]Zn or SS Bolt w/Hexnut & Lock Washer
Small "L"	100-120	8.3-10.0	[4]Zn or SS Bolt w/Hexnut & Lock Washer
Bus Lug	120-180	10.0-15.0	[5]SS Hexnut with Lock Washer
SAE	50-70	4.2-5.8	[6]No Hardware Supplied

Proper connection is to position a lock washer between the nut and the connector (never between the connector and lead terminal) and apply the recommended torque or enough torque to completely compress the lock washer without deforming the lead terminal.

[1]Stainless Steel Hexnut with Stainless Steel Split-Ring Lock Washer (5/16" Positive & Negative)
[2]Stainless Steel Hexnut with Stainless Steel Split-Ring Lock Washer (3/8" Positive & 5/16" Negative)
[3]Square-Head, SS or Zinc-Plated Bolt with SS or Zinc-Plated Hexnut & Split-Ring Lock Washer
[4]Square-Head or Hex-Head, SS or Zinc-Plated Bolt with SS or Zinc-Plated Hexnut & Split-Ring Lock Washer
[5]Stainless Steel Hexnut with SS Split-Ring Lock Washer (1/2" Positive or 3/8" Positive & 3/8" Negative)
[6]No Hardware Supplied - Application Uses SAE Clamp for Positive & Negative Tapered Post

Note: The use of flanged nuts and other types of nuts with captive washers or other hardware not listed above is not recommended by US Battery and their use may void the battery warranty.

U.S. Battery Operating Temperature Guidelines

For charging, we recommend staying within 0°F to120°F (-18 to 49°C) to avoid charging frozen batteries at low temperature or going into thermal runaway at high temperature.

For discharging, we recommend -20°F to 120°F (-29 to 49°C). Batteries discharged at temperatures below 32°F (0°C) should be recharged immediately to avoid freezing.

Batteries discharged at temperatures above 120°F (49°C) should be allowed to cool before recharging.

Extreme temperatures can substantially affect battery performance and charging. Cold reduces battery capacity and retards charging. Heat increases water usage and can result in overcharging. Very high temperatures can cause "thermal run-away" which may lead to an explosion or fire. If extreme temperature is an unavoidable part of an application, consult a battery/charger specialist about ways to deal with the problem.

75 Amp Rating
Expressed in minutes; the amount of time it takes a battery to go from fully charged to 1.75 volts per cell using a constant 75 amp discharge at 80˚F.

20 Hour Rate
Expressed in Ampere Hours; the total amount of Ampere Hours a fully charged battery can provide in a 20 hour period, reaching a discharge level of 1.75 volts per cell at 80˚F. Divide the rating by 20 (hrs) to determine discharge current rate.

6 Hour Rate
Expressed in Ampere Hours; the total amount of Ampere Hours a fully charged battery can provide in a 6 hour period, reaching a discharge level of 1.75 volts per cell at 80˚F. Divide the rating by 6 (hrs) to determine discharge current rate.

Convert 20 Hour To 6 Hour Capacity
Multiply 20 Hr. Ampere Hour Capacity by .84 (Divide result by 6 to determine discharge current rate).

Reserve Capacity
Expressed in minutes, the time it takes for a fully charged battery to reach 1.75 volts per cell using a constant 25 amp. discharge at 80˚F.

C.C.A. (Cold Cranking Amps)
Expressed in amps., a rating usually applied to S.L.I. (starting, lighting, ignition) batteries; the highest discharge amps, that can be sustained by a fully charged battery over 30 seconds without dropping voltage below 1.2 volts per cell at 0˚F.

CA/ M.C.A. (Cranking Amps)
Same as above except that the rating is at 32˚F rather than 0˚F. The higher temperature will result in an approximate increase in the cranking rate of 22%.

Data references within this publication are nominal and should not be considered or construed as maximum or minimum values for specifications or for final design. Data for this product type and model may vary from what is shown in this publication, and U.S. Battery Mfg., Co. makes No warranties, expressed or implied based on the data within this publication.

©2018 U.S. Battery Mfg., Co. All rights reserved. U.S Battery is not liable for damages that may occur from any information provided in or omitted from this publication, under any circumstances. U.S. Battery Mfg., Co. reserves the right to make changes or adjustments to this publication at any time without notices or obligations.

Proper Care and Maintenance of Deep Cycle Batteries

• New batteries should be given a full charge before use.

• New deep cycle batteries need to be cycled several times before reaching full capacity (50 - 125 cycles, depending on type). Capacity will be limited during this period. *XC2 formulation can reach full capacity in as few as 25 cycles.

• Battery cables should be intact, and the connectors kept tight at all times. Always use insulated tools to avoid shorting battery terminals. Regular inspection is recommended.

• Vent caps should be correctly installed and tight during vehicle operation and battery charging.

• Batteries should be kept clean and free of dirt and corrosion at all times.

• Batteries should always be watered after charging unless plates are exposed before charging. If exposed, plates should be covered by approximately 1/8" of electrolyte (add distilled water only). Check electrolyte level after charge. The electrolyte level should be kept 1/4" below the bottom of the fill well in the cell cover.

• Water used to replenish batteries should be distilled or treated not to exceed 200 T.D.S. (total dissolved solids…parts per million). Particular care should be taken to avoid metallic contamination (iron).

• For best battery life, batteries should not be discharged below 80% of their rated capacity. Proper battery sizing will help avoid excessive discharge.

• Battery chargers should be matched to fully charge batteries in an eight hour period. Defective and unmatched chargers will damage batteries or severely reduce their performance. Avoid charging at temperatures above 120°F or ambient, whichever is higher.

• Deep cycle batteries need to be equalized periodically. Equalizing is an extended, low current charge performed after the normal charge cycle. This extra charge helps keep all cells in balance. Actively used batteries should be equalized once per month. Manually timed charger should have the charge time extended approximately 3 hours. Automatically controlled charger should be unplugged and reconnected after completing a charge.

• In situations where multiple batteries are connected in series, parallel or series/parallel, replacement battery(s) should be of the same size, age and usage level as the companion batteries. Do not put a new battery into a pack which has 50 or more cycles. Either replace with all new or use a good used battery(s).

• Periodic battery testing is an important preventative maintenance procedure. Hydrometer readings of each cell (fully charged) gives an indication of balance and true charge level. Imbalance could mean the need for equalizing; is often a sign of improper charging or a bad cell. Voltage checks (open circuit, charged and discharged) can locate a bad battery or weak battery. Load testing will pick out a bad battery when other methods fail. A weak battery will cause premature failure of companion batteries.

• Always use a matched charger and battery pack system. Unmatched chargers will cause potential problems.

• As batteries age, their maintenance requirements change. This means longer charging time and/or higher finish rate (higher amperage at the end of the charge). Usually older batteries need to be watered more often. And, their
capacity decreases.

• Lead acid batteries should be brought up to full charge at the earliest opportunity. Avoid continuously operating batteries in a partially charged condition. This will shorten their life and reduce their capacity.

• Extreme temperatures can substantially affect battery performance and charging. Cold reduces battery capacity and retards charging. Discharged batteries may freeze and cause permanent damage. Heat increases water usage and can result in overcharging. Very high temperatures can cause "thermal run-away" which may lead to an explosion or fire. If extreme temperature is an unavoidable part of an application, consult a battery/charger specialist about ways to deal with the problem.

• Inactivity can be extremely harmful to all lead acid batteries. If seasonal use is anticipated, we recommend the following:

A.) Completely charge the battery before storing.

B.) Remove all electrical connections from the battery, including series/parallel connectors.

C.) Store the battery in as cool a place as possible. However, do not store in a location which will consistently be below 32°F. Batteries will discharge when stored, the lower the temperature the lower the self discharge.

D.) When not in use, boost every two months.

U.S. BATTERY - MAINTENANCE LOG

CUSTOMER					ADDRESS:			
DATE OF SERVICE					TIME OF SERVICE:			
PURCHASE DATE					DISTRIBUTOR NAME:			
TYPE OF CONTROLLER					SERVICE ENGINEER:			
CONTROLLER STATUS	Load Shed*	Boost*	Float*	Fault*	CELL TYPE:		Battery Voltage:	

CELL NO.	SPECIFIC GRAVITY	CELL VOLTAGE	CELL NO.	SPECIFIC GRAVITY	CELL VOLTAGE	CELL NO.	SPECIFIC GRAVITY	CELL VOLTAGE
1			21			41		
2			22			42		
3			23			43		
4			24			44		
5			25			45		
6			26			46		
7			27			47		
8			28			48		
9			29			49		
10			30			50		
11			31			51		
12			32			53		
13			33			53		
14			34			54		
15			35			55		
16			36			56		
17			37			57		
18			38			58		
19			39			59		
20			40			60		
PILOT CELL TEMPERATURE			PILOT CELL TEMPERATURE			PILOT CELL TEMPERATURE		

BATTERY CHECK LIST					BOOST CHARGE		
BATTERY TOPS CLEAN AND DRY			YES	NO	BOOST CURRENT	AMPS	
ENSURE VENT CAPS ARE CLEAN AND TIGHT			YES	NO	DURATION OF BOOST CHARGE	HOURS	
BATTERY TERMINAL CONNECTIONS TIGHT			YES	NO	END OF CHARGE CELL S.G.	MAX	MIN
TERMINAL CONNECTION SAFTY CAPS REPLACED			YES	NO	END OF CHARGE MAX. CELL TEMP	MAX	MIN
ELECTROLYTE LEVELS	AS FOUND	CORRECT	HIGH	LOW	END OF CHARGE MAX. CELL TEMP	ºF/ºC	
	AS LEFT	CORRECT	HIGH	LOW			

NOTES: _____

For more information or questions, please visit WWW.USBATTERY.COM